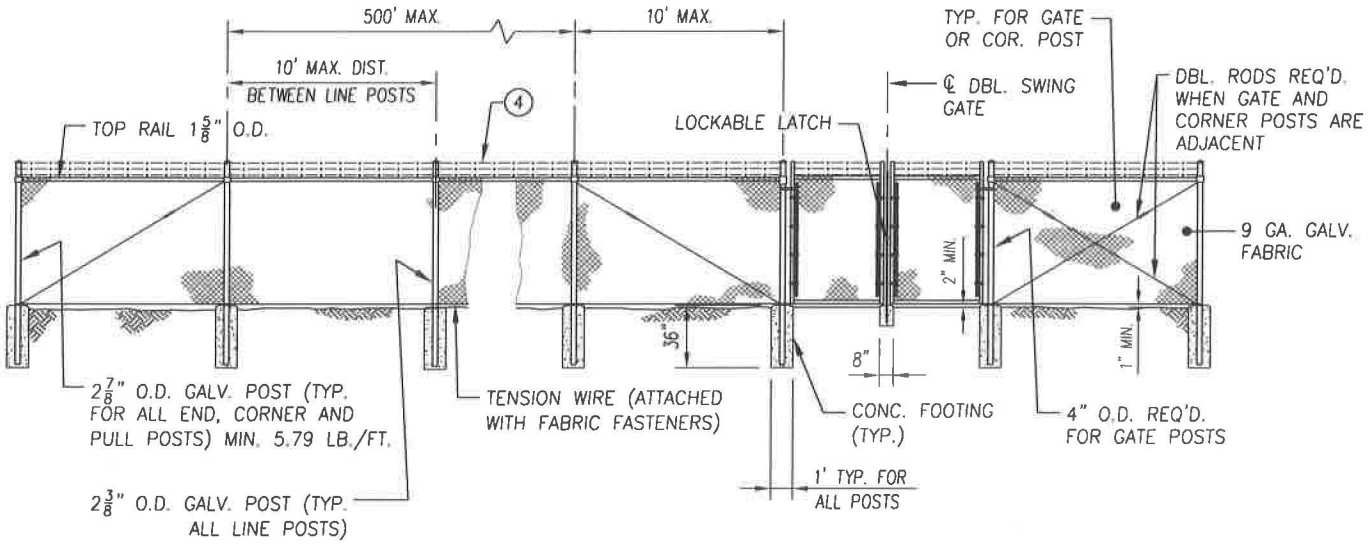

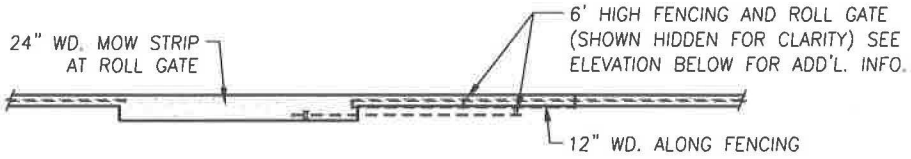

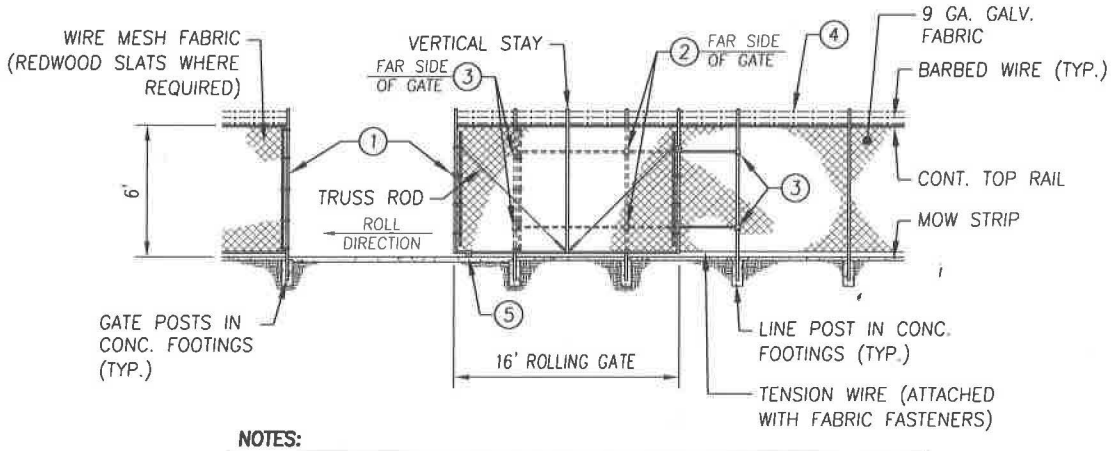

NOTES:

1. GATE FRAME AND ROLLING GATE PIPE TRACK SHALL BE $1\frac{7}{8}$" PIPE.
2. VERTICAL STAY SHALL BE $1\frac{5}{8}$" PIPE.
3. USE $\frac{3}{8}$" STEEL TRUSS RODS WITH TURN BUCKLES.
4. THE CITY ENGINEER MAY REQUIRED BARBED WIRE.
5. REFER TO CITY OF TULARE TECHNICAL SPECIFICATIONS.

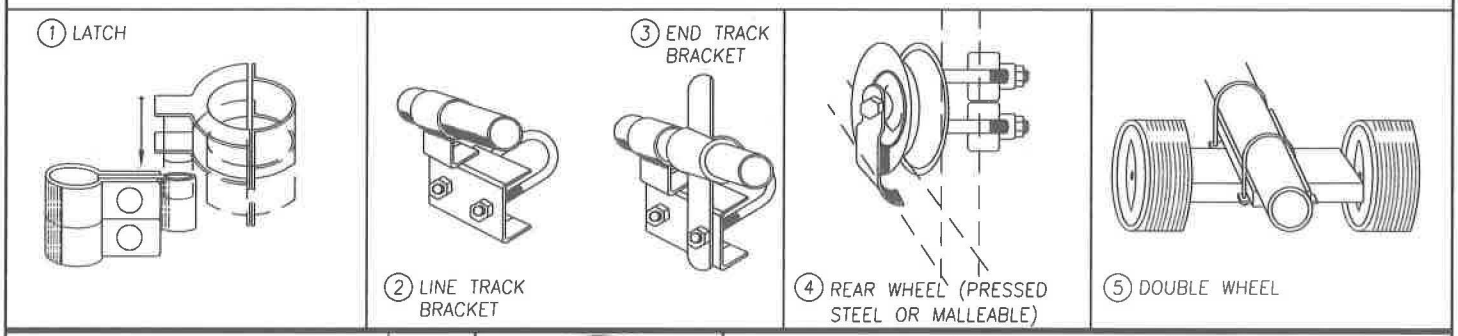

REVISIONS	DATE

CITY OF TULARE INCORPORATED APRIL 5, 1888

CITY OF TULARE
PUBLIC IMPROVEMENT STANDARD

CHAINLINK FENCE AND GATES

DRAWING NO.: 9110

Approved By: Michael W. Miller
City Engineer

Date: 11/15/16

1 OF 1